N-RACK embelishing your enclosures...

Industrial Hardware | embellishing your enclosures...

Model: AB 301-3-1

RL 3PL

Photo View

3D Rendered View

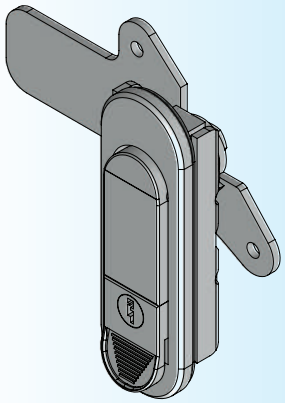

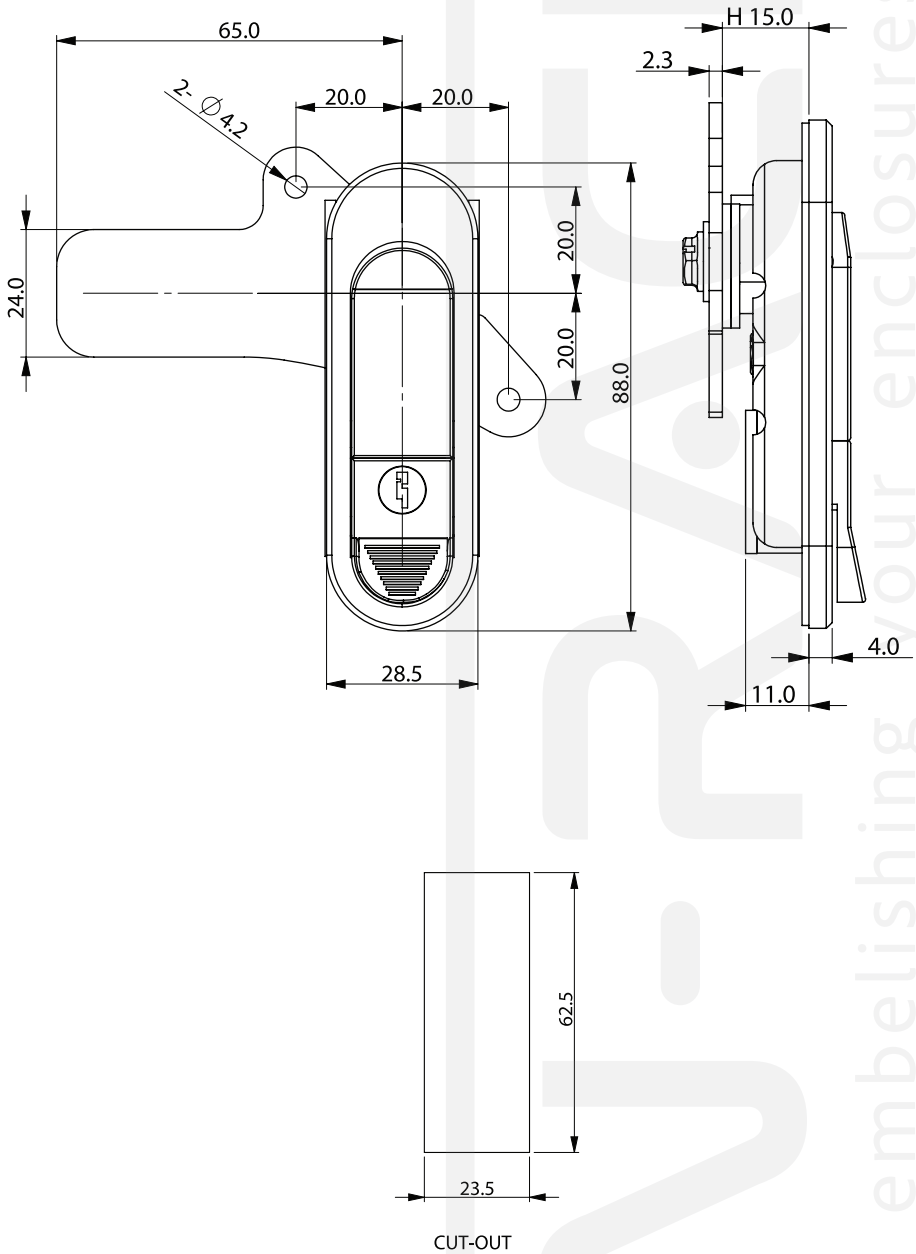

- MATERIAL: ZINC DIE CASTING BODY, ZINC PLATING CAM, FIXING PARTS
- FINISH: GRAY CHROME PLATING
- PANEL THICKNESS: 1-3MM

For Product 3D View Log in: www.nrack.com | (TEL) +91 80 231 88074, 094484 77572 | E-mail: info@nrack.com