For Product Step File or 3D Model Send a Request Mail To info@nrack.com

Photo View

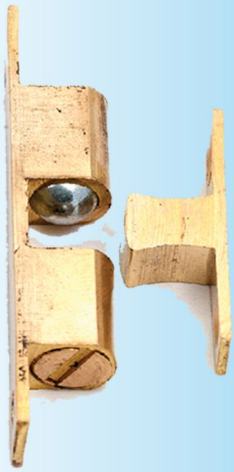

Door Catcher

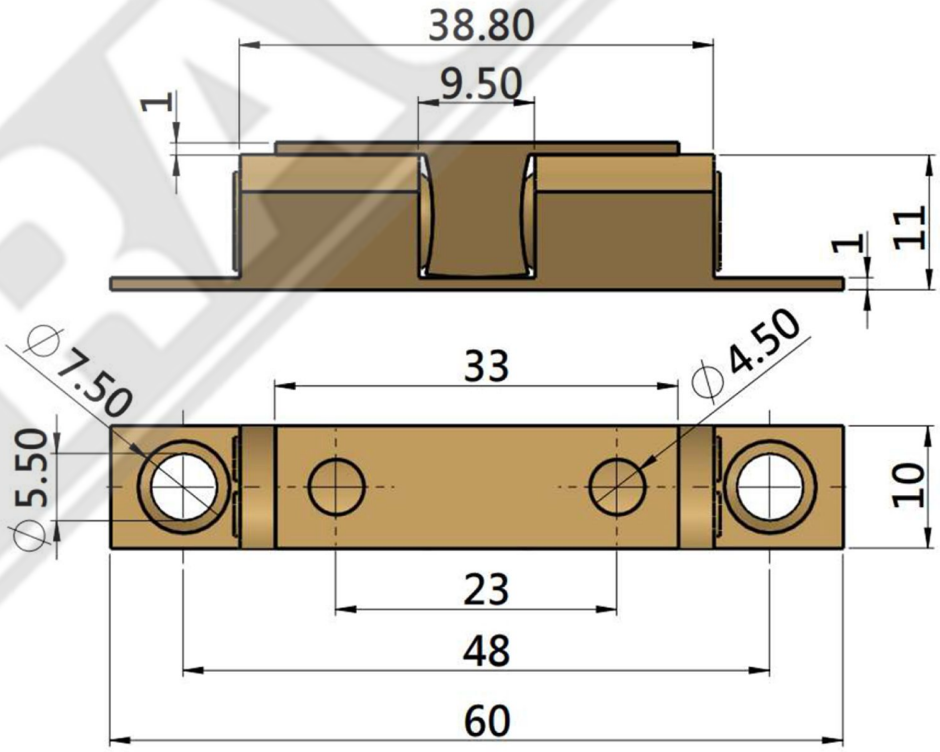

3D Rendered View

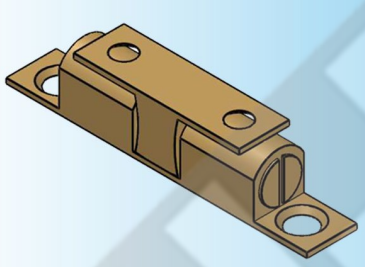

OA - 49

- Material: Brass

Website: www.nrack.com (TEL) +91 80 231 88071, 094484 77572 E-mail: info@nrack.com