N-RACK embelishing your enclosures...

Industrial Hardware | embellishing your enclosures...

Model: NY 1113S

RL | IP54 | 3PL | INOX AISI 3..

Photo View

3D Rendered View

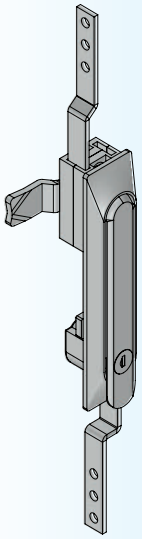

- MATERIAL: SS 304 / 316
- FINISH: MIRROR POLISHED OR BRUSHED

STAINLESS STEEL 3-POINT LOCK

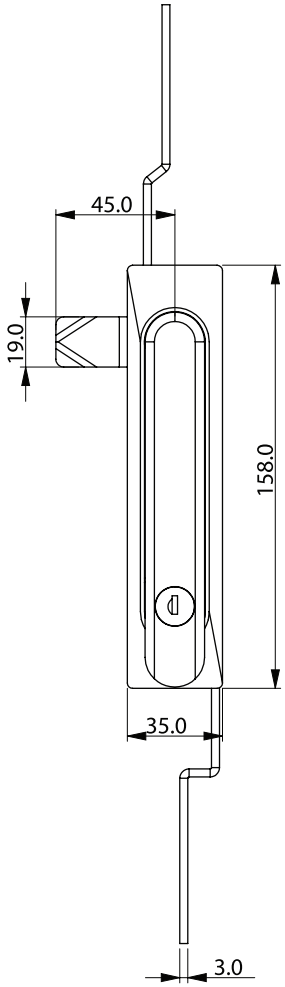

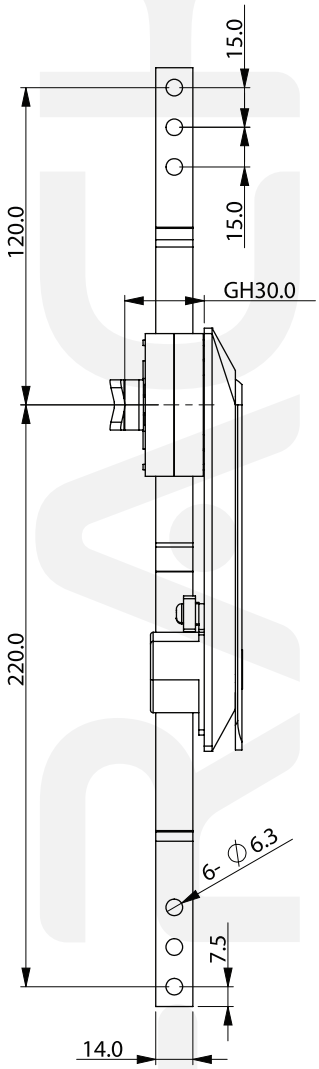

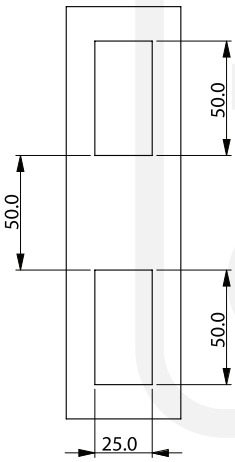

CUT-OUT

For Product 3D View Log in: www.nrack.com | (TEL) +91 80 231 88074, 094484 77572 | E-mail: info@nrack.com