N-RACK embelishing your enclosures...

Industrial Hardware | embellishing your enclosures...

Model: MS 903-1

Photo View

3D Rendered View

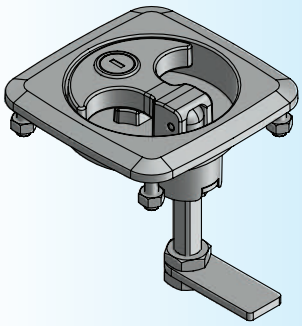

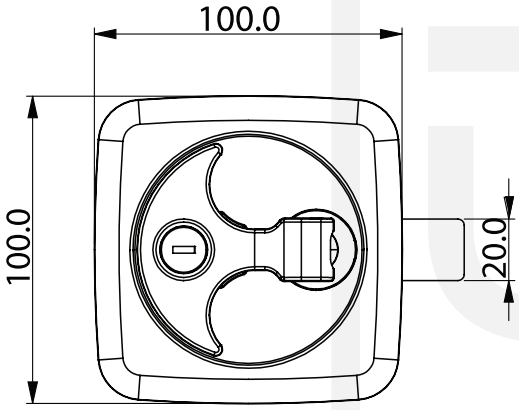

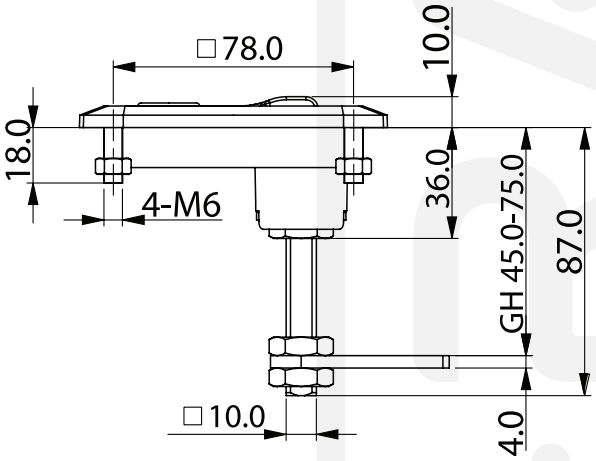

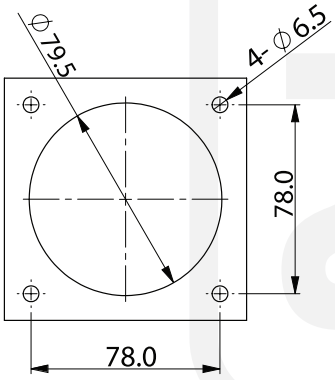

CUT-OUT

- MATERIAL: ZINC DIE CASTING HANDLE & HOUSING, ZINC PLATING CAM
- FINISH: BRIGHT CHROME PLATING
- PANEL THICKNESS: 2-5MM
- REMARK: CAM CUTOUT 10X10

For Product 3D View Log in: www.nrack.com | (TEL) +91 80 231 88074, 094484 77572 | E-mail: info@nrack.com