N-RACK
embelishing your enclosures...

Industrial Hardware | embellishing your enclosures...

Model: MS 826

IP54 RL

Photo View

3D Rendered View

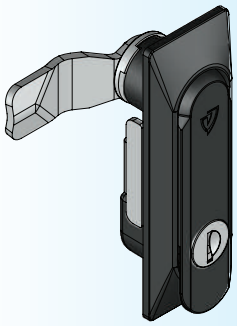

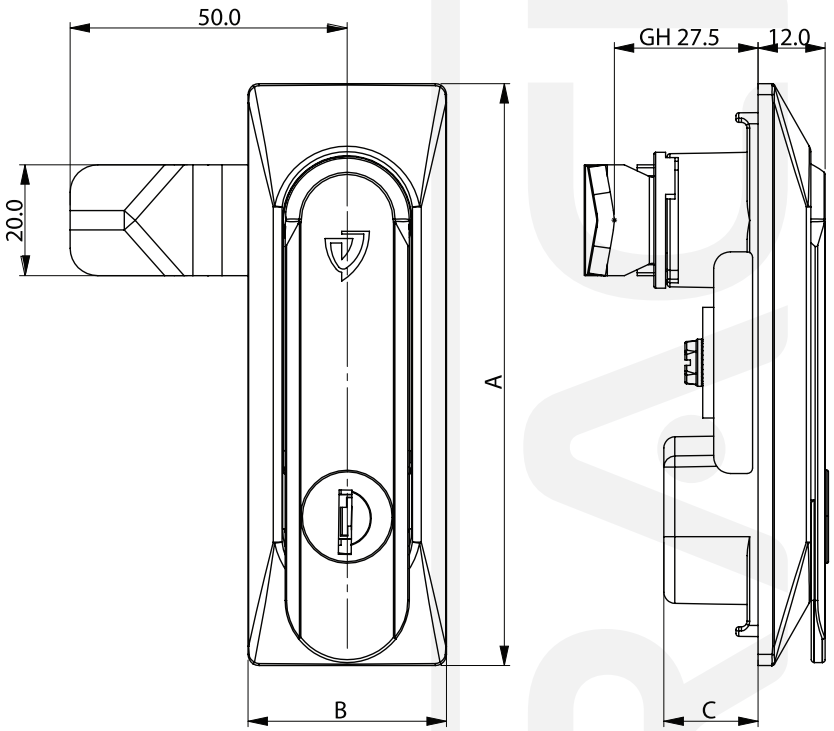

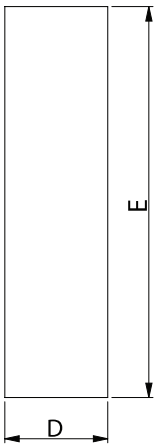

CUT-OUT

PART NO	DIMENSIONS				
	A	B	C	D	E
MS826-1-1	160	36	24	25	150
MS826-3-1	105	36	17	25	95

- MATERIAL: PA BODY, ZINC DIE CASTING HANDLE, ZINC PLATING CAM, FIXING PARTS
- FINISH: MATT BLACK
- PANEL THICKNESS: 1-3MM
- REMARKS: CAM CUTOUT 8X8

N-RACK embelishing your enclosures...