N-RACK embelishing your enclosures...

Industrial Hardware | embellishing your enclosures...

Model: CP 02

INOX AISI 3..

Photo View

3D Rendered View

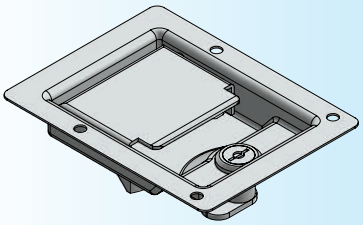

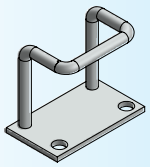

- MATERIAL: SS 304
- FINISH: CHROME PLATING

STAINLESS STEEL CANOPY LOCK

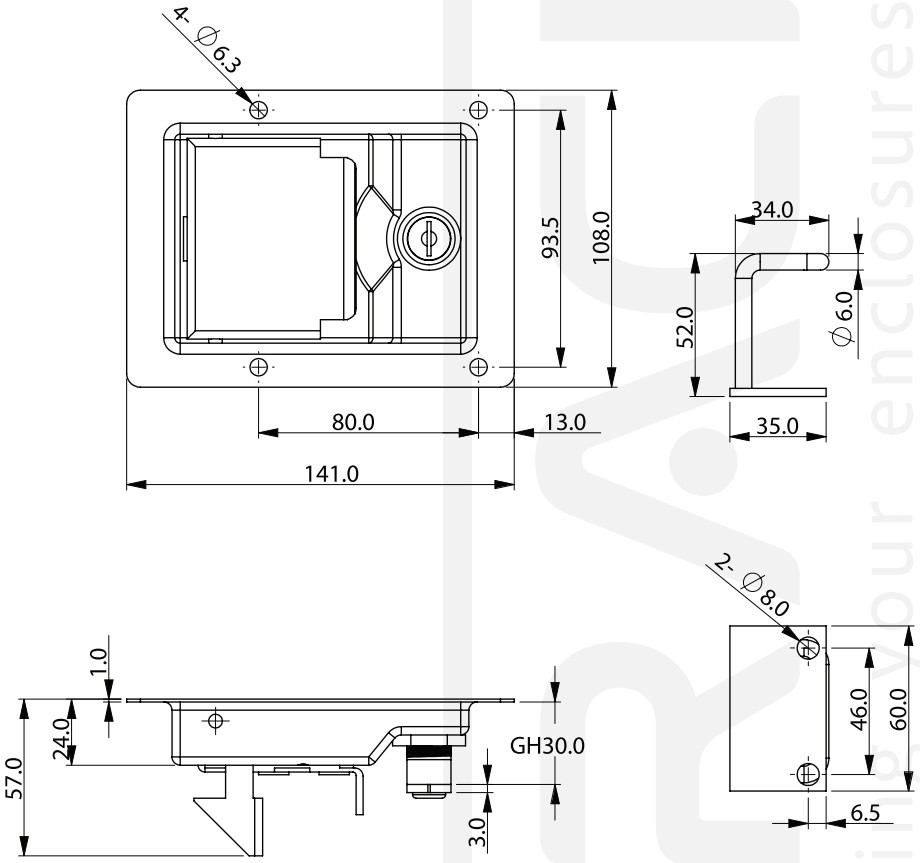

For Product 3D View Log in: www.nrack.com | (TEL) +91 80 231 88074, 094484 77572 | E-mail: info@nrack.com