NEW

For Product Step File or 3D Model Send a Request Mail To info@nrack.com

Photo View

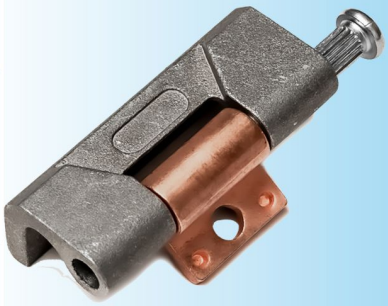

3D Rendered View

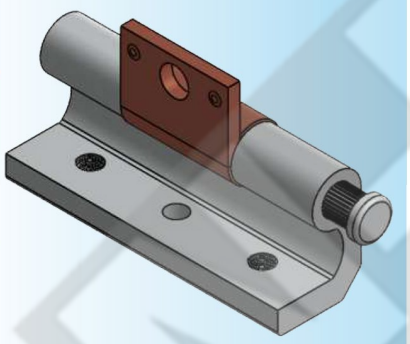

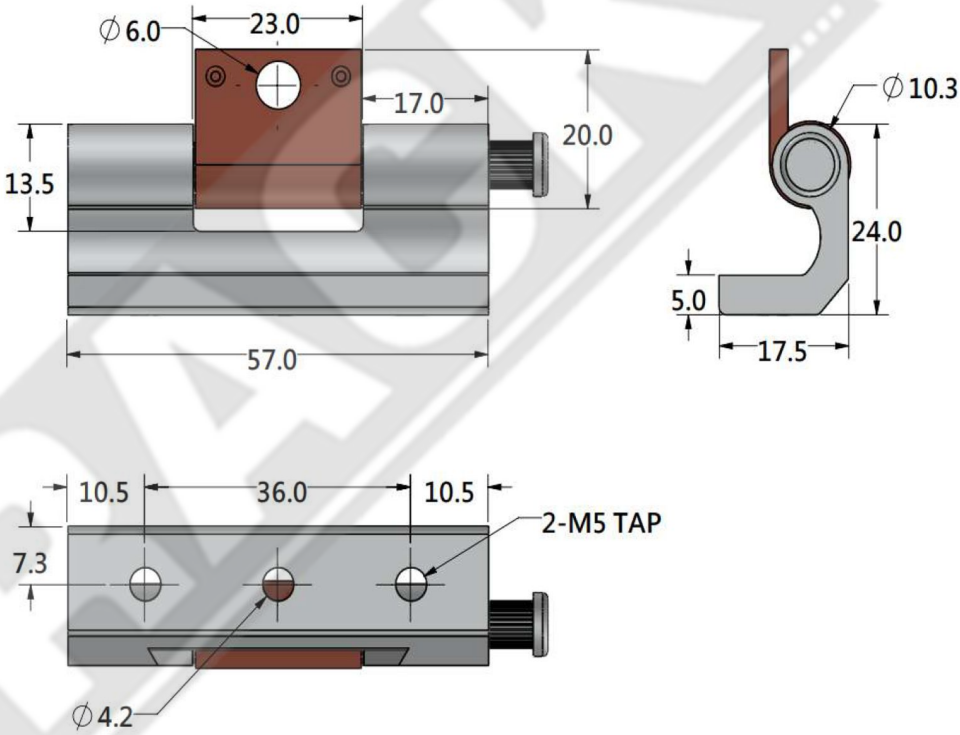

HN - 37 A

- Material: Zinc Die Casting, Steel Bracket
- Finish:Sand Blasting Hinge, Copper/Blue Plating Bracket

Website: www.nrack.com (TEL) +91 80 231 88071, 094484 77572 E-mail: info@nrack.com